Volume 1, Issue 9 (2026)
PP 01-06

VIVA-TECH IJRI
ANNUAL RESEARCH JOURNAL
VIVA-TECH INTERNATIONAL JOURNAL FOR RESEARCH AND INNOVATION
ANNUAL RESEARCH JOURNAL
ISSN(ONLINE): 2581-7280

A Vision-Guided Quadruped Robot For Terrain Navigation And Target Tracking

Nutan Malekar[1], Chaitanya Raut[2], Ganesh Torde[3], Lokesh Shukla[4], Tanvi Dalvi[5]

[1,2,3,4,5]*(EXTC, VIVA INSTITUTE OF TECHNOLOGY/ MUMBAI UNIVERSITY , INDIA)*

Abstract: *The increasing demand for stable, adaptive, and intelligent legged robots in exploration, surveillance, and assistive applications has highlighted the need for compact and efficient quadruped systems. Traditional wheeled and tracked robots face limitations in maneuvering over uneven terrains, while many existing quadruped designs suffer from limited stability and adaptability in real-world conditions.*

To address these challenges, this project presents the design and development of a 12-servo quadruped robot named QuadroNav, featuring 12 degrees of freedom (DOF) for enhanced flexibility and control. The system is powered by a Raspberry Pi serving as the primary processing unit, responsible for motion control, sensor integration, and real-time decision- making. The robot's lightweight yet robust frame is constructed using custom 3D-printed components, optimized for legged mobility. Each leg is actuated by high-torque 35 kg-cm servo motors driven by a 16-channel PCA9685 module, ensuring smooth and precise motion control. An MPU6050 IMU provides balance feedback for posture correction, while inverse kinematics (IK) algorithms enable coordinated and natural leg movements.

To achieve fluid and stable locomotion, a Bezier curve-based gait generation algorithm is implemented, producing continuous motion patterns that mimic biological walking. A front- mounted camera module enables vision-guided navigation, allowing the robot to detect obstacles, plan paths, and adapt to environmental variations.

Compared to conventional quadruped designs, QuadroNav demonstrates superior adaptability, stability, and intelligence. The seamless integration of mechanical design, sensory feedback, and control algorithms allows it to perform dynamic walking, balancing, and navigation tasks efficiently, making it a versatile platform for advanced robotics research and real-world deployment.

Keywords:- *Three Dimensional, Artifical intelligence, computer-aided design, Direct current, Degree of freedom, Back Right, front Left, Inter Integrated circuit, Inertial Measurement unit, Lithium Ion Battery*

I. Introduction

Quadruped robots represent one of the most active and challenging domains in the field of robotics, inspired by the efficient, adaptive, and biologically evolved locomotion of four-legged animals. [7, 8] These robots are capable of maintaining balance and stability while navigating through uneven and unpredictable terrains, making them highly suitable for applications in exploration, surveillance, defense, and disaster response operations. Unlike wheeled or tracked robots, which often struggle on irregular surfaces or steep slopes, quadruped systems possess a unique mechanical advantage through legged motion that allows them to step over obstacles, adapt to varying terrain conditions, and perform dynamic maneuvers with greater precision and agility. This combination of mobility, stability, and adaptability has made quadruped robotics a key area of research in modern robotic engineering.

The design and control of quadruped robots require a multidisciplinary approach, combining mechanical engineering, electronics, control theory, and computer algorithms. Achieving smooth, balanced, and stable motion involves careful

coordination between mechanical structure, gait generation, and feedback control. Gait patterns such as walking, trotting, pacing, and bounding have been extensively studied to achieve energy-efficient and naturally inspired motion. [16, 12] Each gait type offers a specific trade-off between stability and speed, depending on the terrain and the desired behavior of the robot. In addition, advanced control algorithms utilize feedback from motion sensors and kinematic data to dynamically adjust leg trajectories, ensuring that the center of gravity remains stable during movement. [11, 9]

With the rapid evolution of mechatronic components, sensors, and embedded controllers, the development of quadruped robots has become increasingly accessible and customizable. Affordable servo actuators, lightweight structural materials, and open-source control platforms have significantly reduced the complexity and cost associated with quadruped locomotion research. [14, 8] Furthermore, the integration of sensors such as accelerometers, gyroscopes, and ultrasonic modules has enhanced environmental awareness and balance correction capabilities, while modern fabrication methods like 3D printing enable rapid prototyping and modular design modifications. These advancements have allowed both academic institutions and independent researchers to explore quadruped robotics for educational, experimental, and industrial purposes.

This project, titled QuadroNav, focuses on the design, development, and implementation of a four- legged walking robot capable of demonstrating stable quadruped locomotion through predefined gait algorithms. [9, 10] The system is built around a mechanically optimized leg structure,

actuated by servo motors arranged to simulate the movement of animal limbs. A custom gait generation algorithm ensures synchronized and smooth leg motion, while maintaining balance and direction control during walking. The robot's design emphasizes modularity, allowing easy modification or expansion for future experiments involving obstacle detection, wireless control, or semi-autonomous navigation. The QuadroNav Quadruped Robot serves as a practical platform for exploring the principles of robotic locomotion, motion stability, and balance control. Its simplicity and affordability make it an ideal project for academic learning, research, and hands-on experimentation in robotics and automation. [8, 7]

II. Literature Review

The literature review is a critical discussion and summary of statistical literature that is of general and specialized relevance to the particular area and topic of the research problem in statistics. This section describes the previous research already done by other researchers and provides a foundation for developing this project. Before designing the quadruped robot, a detailed review of existing technologies and research work was conducted. This review is divided into three categories: (a) Market Survey, (b) Paper Survey, and (c) Summary and Research Gap.

Market Survey

Quadruped robots have become an important class of legged robots, capable of traversing complex terrains and performing tasks beyond the ability of wheeled or tracked systems. [7, 8] The global robotics market has seen rapid advancements in quadruped design, focusing on modularity, adaptability, and intelligence. Depending on their application and complexity, quadruped robots can be broadly categorized into three main types:

Educational and Research Quadrupeds: These are low-cost, lightweight robots designed for learning and experimentation. They typically use servo motors and controllers like Raspberry Pi or Arduino. Examples include open-source quadrupeds such as Petoi Bittle, Stanford Pupper, and other 3D-printed models used in universities and labs. Their main objective is to support algorithm testing, gait learning, and AI-based control research at an affordable cost. [8, 7]

Industrial Quadrupeds: These robots are built for real-world operational use, often featuring robust metal frames, advanced sensors, and AI-assisted navigation. Examples include Boston Dynamics' Spot, ANYmal from ETH Zurich, and Unitree's Go1. They are employed in areas such as inspection, mapping, logistics, and hazardous environment monitoring. However, their high cost and proprietary systems limit accessibility for smaller research teams. [8, 7]

Defense and Tactical Quadrupeds: These systems are specialized for military applications like reconnaissance, surveillance, and supply transport. Equipped with LIDAR, thermal cameras, and GPS modules, they can operate autonomously in challenging terrains and under adverse conditions. Defense quadrupeds focus on endurance, payload capacity, and mobility, but they are expensive and restricted for civilian or academic use.[7] Overall, the market trend shows a growing demand for affordable, modular, and intelligent quadruped robots that can bridge the gap between educational models and advanced industrial- grade systems. The increasing availability of compact computing platforms such as Raspberry Pi has enabled developers to create research-grade quadrupeds with features like camera-based feedback, wireless control, and semi-autonomous operation. [8]

III. METHODOLOGY

Overview

Parameter	Value	Unit
Mass	1.9	Kg
Body Length	31.5	mm
Body Width	18.5	mm
Body Height	18.5	mm
Leg Link Lngth	100	mm

Table 1.1 : Body design parameters of robot

QuadroNav is a four-legged (quadruped) walking robot designed to move on uneven surfaces more effectively than a wheeled robot. It uses servo-driven legs controlled through a gait pattern (walk/trot-style steps) where each leg follows a timed trajectory, and inverse kinematics (IK) converts target foot positions into joint angles. A controller (typically a Raspberry Pi / microcontroller + servo driver) generates movement commands like forward, backward, left, right, and stop, while maintaining a stable body posture. The main goal of QuadroNav is reliable locomotion with basic navigation capability, making it suitable for education, prototyping, and robotics research demonstrations.

Fig 1: Side view (Actual photograph)

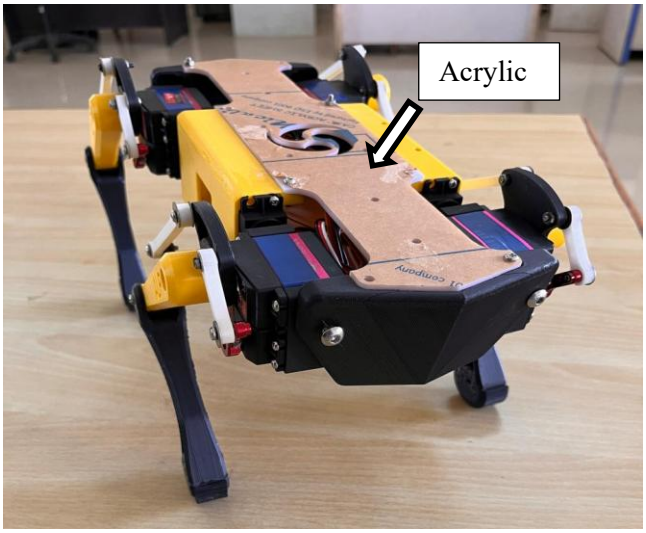

Fig 2 : Front view (Actual photograph)

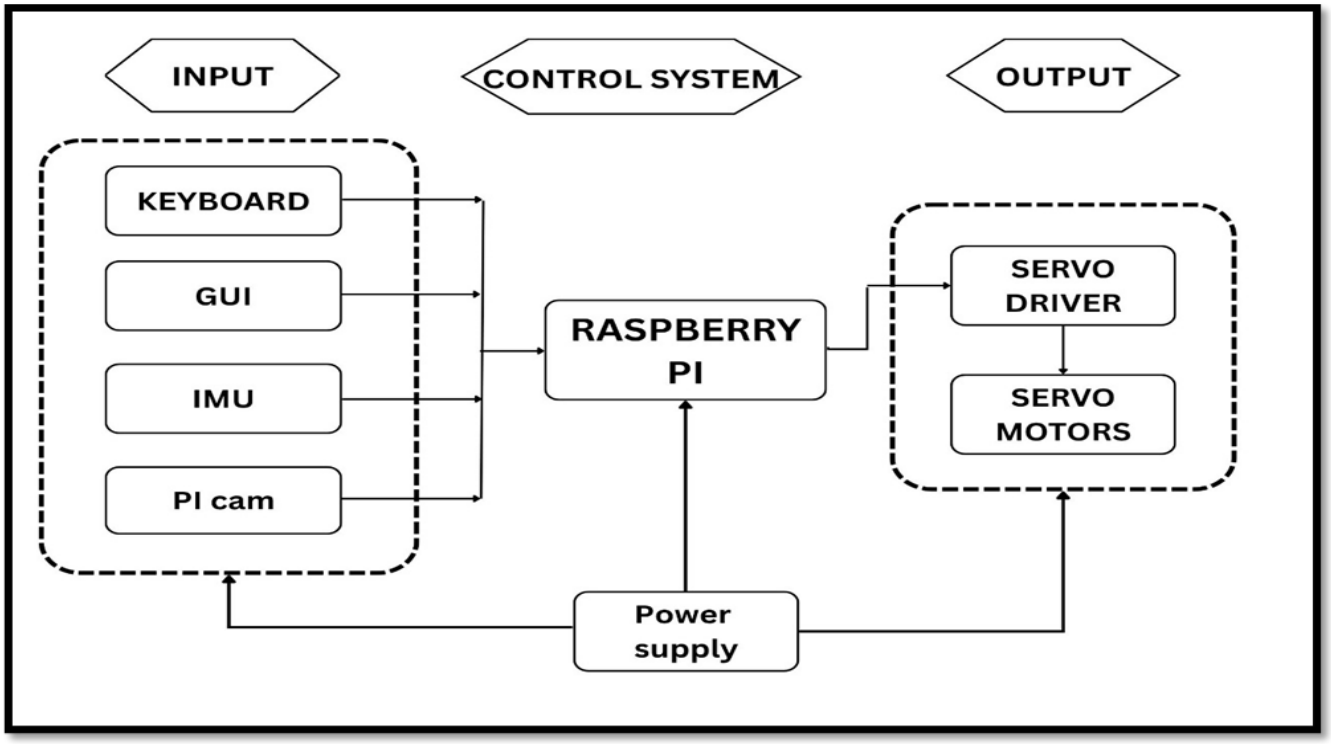

Fig 3 : Block diagram of Control Architecture

The block diagram of QuadroNav illustrates the complete control and feedback architecture of the quadruped robot. The system is divided into three main sections: Input, Control System, and Feedback, all coordinated through the central processing unit — the Raspberry Pi.

Input Section: The input section consists of the Keyboard and Graphical User Interface (GUI), which allow the user to send commands or adjust parameters for the robot. These inputs are communicated to the Raspberry Pi, which interprets and processes them for motion or control actions.

Control System: The Raspberry Pi acts as the brain of the robot. It processes data received from the input section and executes control algorithms that determine the robot's actions. The Raspberry Pi generates appropriate control signals that are sent to the actuators through servo drivers. This ensures precise movement of the robot's limbs according to user commands or autonomous decision-making.

Actuators: The actuators consist of Servo Drivers and Servo Motors. The servo drivers receive control signals from the Raspberry Pi and regulate the power and direction of the servo motors. The servo motors, in turn, perform the mechanical movement of the quadruped robot's joints, enabling walking, turning, and other actions.

Feedback Section: The feedback section includes the IMU (Inertial Measurement Unit) and Pi Camera.
The IMU provides real-time orientation, acceleration, and angular velocity data, helping the control system maintain balance and stability.

The Pi Camera captures visual data from the surroundings, which can be used for vision-based navigation or object detection.Both feedback sensors send data back to the Raspberry Pi, enabling closed-loop control for improved accuracy and adaptive movement.

Quadruped Robot: The mechanical body of the quadruped robot integrates all the actuator and sensor systems. It executes the motion commands generated by the control system and provides feedback for correction, completing the control loop

Volume 1, Issue 9 (2026)
PP 01-06

IV. RESULTS

3D Printed parts

Fig 4 : 3D Printed leg tibia

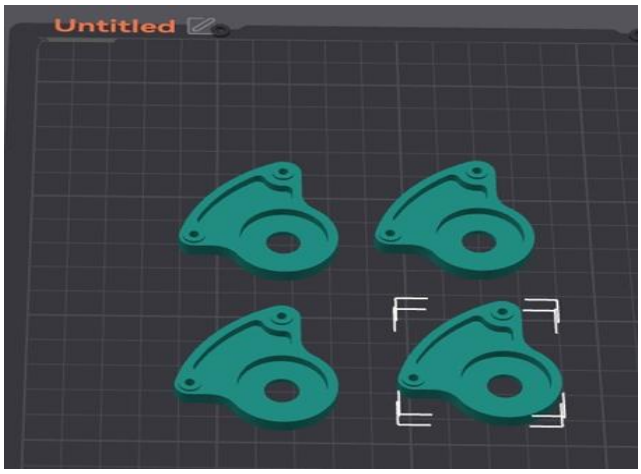

Figure 5: Leg for tibia and femur

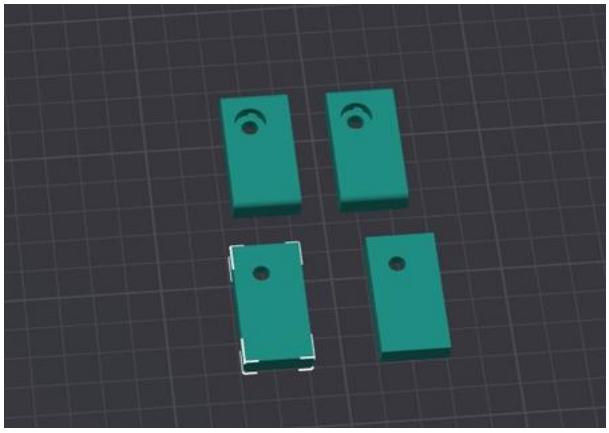

Figure 6 : Servo Mount Brackets

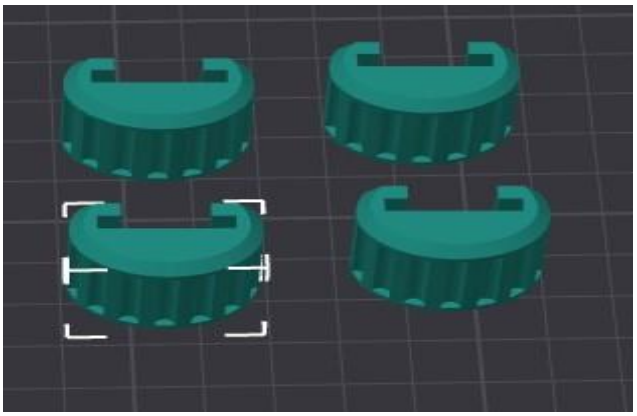

Figure 7: legs grips

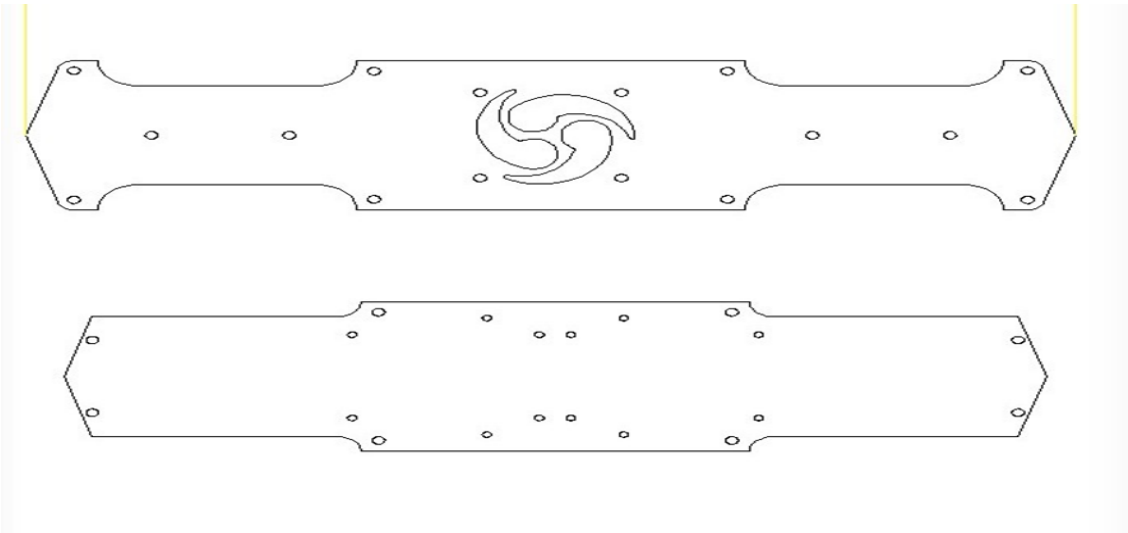

Figure 8 : TOP and BOTTOM plates cover

Figure 9 : 3D Printed legs femur

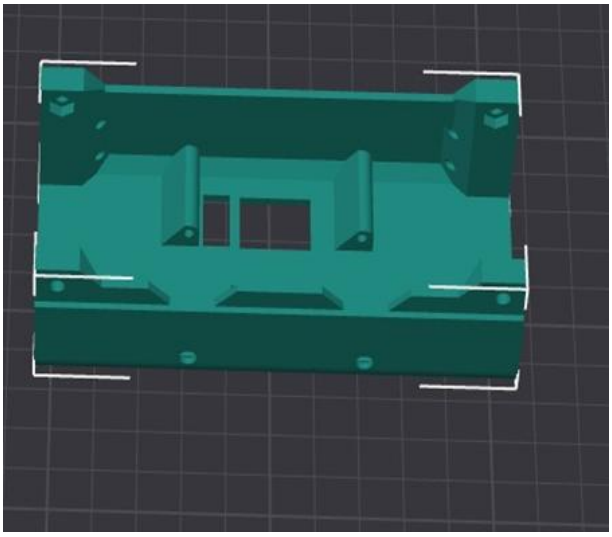

Figure 10 : side covering of body

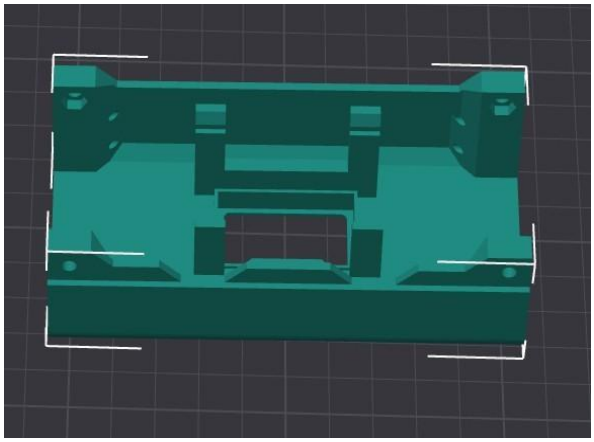

Figure 11 : side covering of body

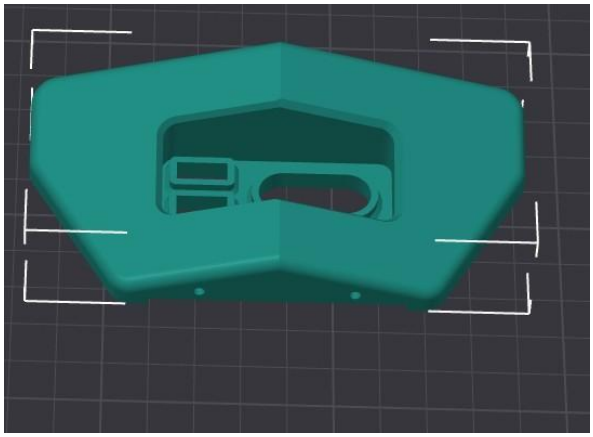

Figure 12 : side covering of body

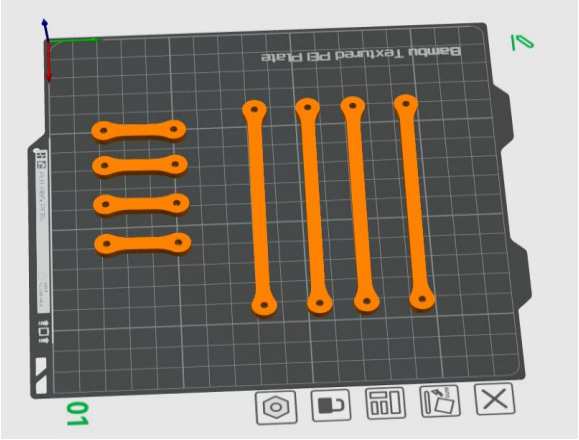

Figure 12 : links 100mm and 35mm

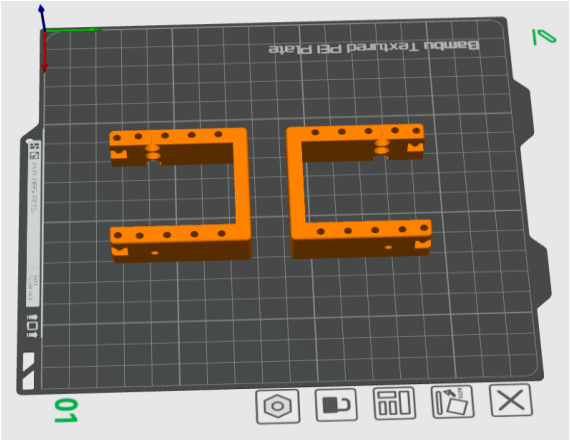

Figure 13 : servo motor brackets

Figure 14 : Complete look of robot

CONCLUSION

The development of the vision-guided quadruped robot QuadroNav has been both a challenging and fulfilling experience, showcasing the integration of mechanical design, embedded control, and intelligent navigation. The project successfully demonstrated key concepts in legged robotics such as balance stabilization, inverse kinematics-based motion control, and smooth gait generation. Built using 12 high-torque servo motors, a Raspberry Pi controller, a 16-channel servo driver, and a 3D-printed mechanical structure, the robot achieved stable walking and posture control on varying terrains.

A significant accomplishment of this project was the seamless integration of hardware and software, enabling real-time feedback from the MPU6050 IMU sensor for dynamic balance and adaptive movement. The use of Bezier curve-based gait generation ensured smooth and natural locomotion, while the addition of a camera module enabled vision-assisted navigation and environmental awareness. This combination of sensory inputs enhanced the robot's ability to maintain stability and perform coordinated leg movements under varying conditions.

The project also provided an in-depth understanding of robotics concepts such as inverse kinematics, servo synchronization, and motion planning, while offering practical experience in 3D modeling, control system design, and embedded programming. Although the robot successfully demonstrated stable walking and navigation, there remains scope for improvement in terrain adaptability, gait smoothness, and power efficiency. Future work may include integrating machine learning-based terrain recognition, optimizing gait transitions, and adding advanced sensors such as LiDAR or ultrasonic modules to improve environmental perception. Overall, the QuadroNav project stands as a comprehensive demonstration of modern quadruped locomotion principles, combining mechanical innovation with intelligent control for autonomous, stable, and adaptive robotic motion.

REFERENCES

[1] S. Suzuki, K. Matayoshi, M. Hayashibe, and D. Owaki, "Foot trajectory as a key factor for diverse gait patterns in quadruped robot locomotion," *Scientific Reports*, vol. 15, Art. no. 1861, 2025.

[2] T. Hao, Q. Li, and Y. Chen, "Energy-efficient quadrupedal locomotion: A survey and novel framework," *IEEE Robotics and Automation Letters*, vol. 9, no. 3, pp. 1438–1445, Mar. 2024.

[3] T. Li, X. Zhao, and Y. Zhang, "Learning terrain-adaptive locomotion with agile quadruped robots," in *Proc. IEEE Int. Conf. on Robotics and Automation (ICRA)*, 2023, pp. 2331–2338.

[4] H. Zhang, J. Wang, and L. Sun, "Deep reinforcement learning for real-world quadrupedal locomotion: A comprehensive review," *IEEE Access*, vol. 10, pp. 103462–103480, 2022.

[5] Y. Fukuda, T. Kobayashi, and S. Nakamura, "Sim2Real of quadrupedal robot locomotion via domain randomization and on-robot adaptation," in *Proc. IEEE Int. Conf. on Robotics and Biomimetics (ROBIO)*, 2021, pp. 1102–1108.

[6] T. Kobayashi, Y. Fukuda, and K. Sekiyama, "Reinforcement learning for quadrupedal locomotion with adaptive sampling," *IEEE Trans. on Robotics*, vol. 36, no. 4, pp. 1173– 1183, Aug. 2020.

[7] D. Bellicoso, M. Focchi, C. Gehring, M. H. Hutter, and C. Semini, "Perceptive locomotion for quadrupedal robots over challenging terrain," *IEEE Trans. on Robotics*, vol. 35, no. 2, pp. 361–377, Apr. 2019.

[8] M. Hutter, C. D. Remy, and R. Siegwart, "Efficient and versatile locomotion with the quadrupedal robot ANYmal," *IEEE Robotics and Automation Letters*, vol. 4, no. 3, pp. 2532–2539, Jul. 2019.

[9] G. Bledt, M. J. Powell, C. X. Nguyen, H. D. Kim, and S. Kim, "Design and control of a robust, dynamic quadruped robot," in *Proc. IEEE/RSJ Int. Conf. on Intelligent Robots and Systems (IROS)*, 2018, pp. 4218–4225.

[10] J. Di Carlo, P. M. Wensing, B. Katz, G. Bledt, and S. Kim, "Dynamic locomotion in the MIT Cheetah 3 through convex model-predictive control," in *Proc. IEEE Int. Conf. on Robotics and Automation (ICRA)*, 2018, pp. 1–7.

[11] D. Bellicoso, M. Hutter, and M. Focchi, "Footstep and motion planning for quadrupedal robots in challenging terrain," *IEEE Robotics and Automation Magazine*, vol. 25, no. 3, pp. 56–65, Sept. 2018.

[12] S. Kim, H. J. Kim, and J. Yang, "High-speed trotting of quadruped robot using central pattern generator and optimal controller," *IEEE/ASME Trans. on Mechatronics*, vol. 22, no. 1, pp. 12–22, Feb. 2017.

[13] M. Häni, D. Bellicoso, and A. Hutter, "Versatile and robust legged locomotion using entire- body impulse control," in *Proc. IEEE/RSJ Int. Conf. on Intelligent Robots and Systems (IROS)*, 2017, pp. 3975–3982.

[14] A. Hutter, C. Gehring, D. Bellicoso, M. H. Bloesch, and R. Siegwart, "ANYmal – A highly mobile and dynamic quadrupedal robot," in *Proc. IEEE/RSJ Int. Conf. on Intelligent Robots and Systems (IROS)*, 2016, pp. 38–44.

[15] L. Righetti, A. J. Ijspeert, and J. Schuetz, "Starleth: A compliant quadrupedal robot for fast, efficient and versatile locomotion," in *Proc. IEEE/RSJ Int. Conf. on Intelligent Robots and Systems (IROS)*, 2013, pp. 3362–3369.

[16] M. H. Raibert and E. Tello, "Legged robots that balance," *IEEE Expert*, vol. 1, no. 2, pp. 69–81, Mar. 1986.

Volume 1, Issue 9 (2026)
PP 01-XX